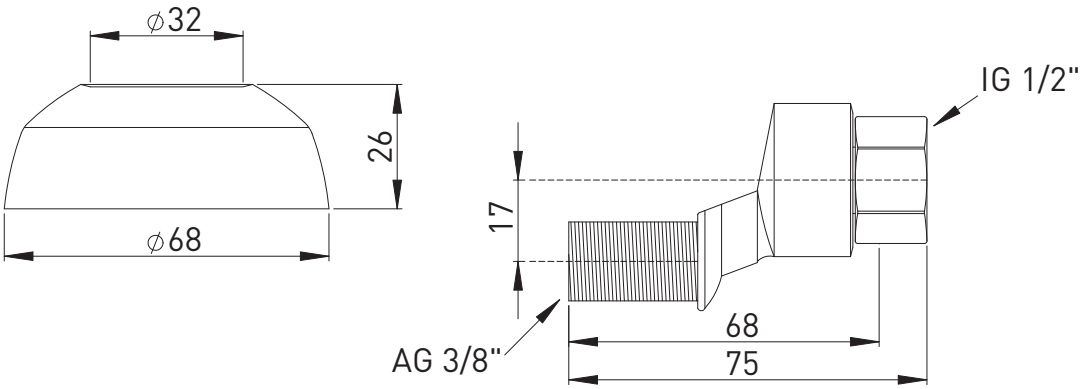
⌀32
26
⌀68
IG 1/2"
17
68
75
AG 3/8"